AN 180 3D

for unrebated residential doors up to 80 kg

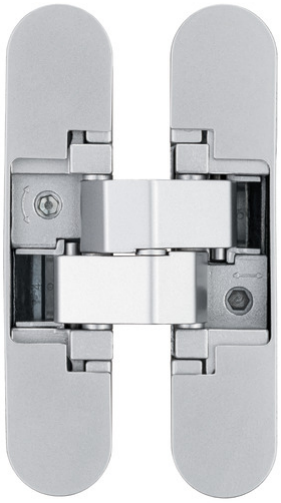

Product features

- completely concealed hinge system
- for timber and aluminium frames
- for unrebated residential doors
- 3D adjustment (side +/- 1,5 mm, height +/- 2,5 mm, compression +/- 1,0 mm)
- material zamak / steel

Technical data

Property	Value
Load capacity	80,0 kg
Overall length	110,0 mm
Width (door part)	24,0 mm
Width (frame part)	24,0 mm
Cutter diameter	16,0 mm
Collar ring diameter	27,0 mm
Opening angle	180°

Notes

The load capacity mentioned above refers to the use

Quality marks

CE certification

IFT certification

UL certification

Classification code

3	7	4	1 *1	1	— *2	0	11

*1 Test evidence for functional doors to be achieved with full door sets and assemblies.

*2 depending on the finish

24.12.2025 © SIMONSWERK GmbH

Despite the utmost care taken in the preparation of this data sheet, we cannot accept any liability for printing errors or mistakes.

of 2 hinges per door leaf (900 x 2100 mm).

Suggested screws: Frame side: Countersunk head screws DIN 7505 A, Diameter 4,5 mm Door side: Pan head screws DIN 7505 B, Diameter 4,5 mm

Alternatively, the routing can be carried out with a cutter diameter of 14,0 mm and a collar ring diameter of 25,0 mm.

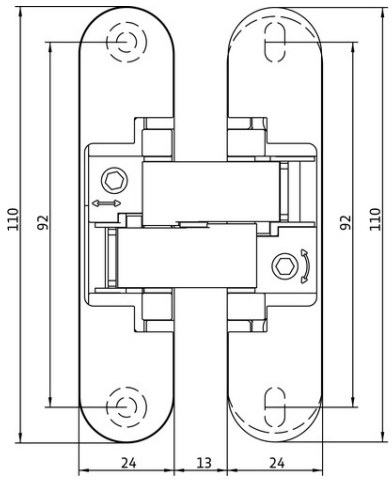

front view

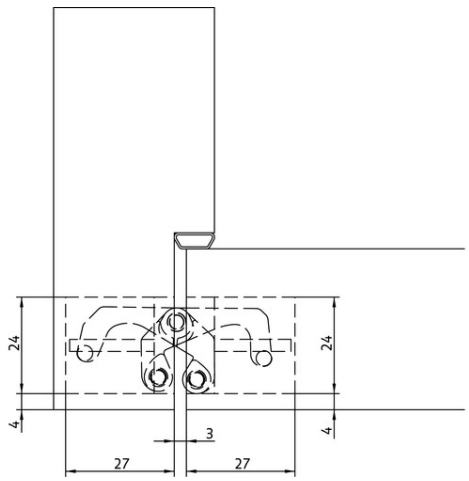

cross section 1

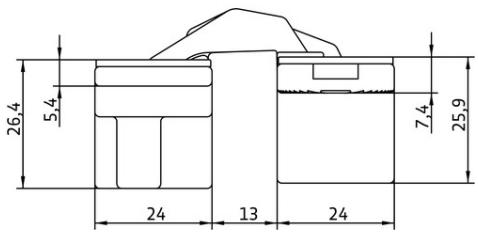

cross section 2

Combinations

AN 107 3D C60
AN 140 3D FZ

Item versions

Finish	Rustic Umber (AN 012)
VPE	pack of 2
DIN	DIN right and left hand
ITEM NO.	AN 180 3D (AN 012)
ITEM NO. (SAP)	
EAN	8054608708037

Finish	Satin Chrome (AN 014)
VPE	pack of 2
DIN	DIN right and left hand
ITEM NO.	AN 180 3D (AN 014)
ITEM NO. (SAP)	
EAN	8054608708044

Finish	Light Bronze (AN 016)
VPE	pack of 2
DIN	DIN right and left hand
ITEM NO.	AN 180 3D (AN 016)
ITEM NO. (SAP)	
EAN	8054608708068

Finish	Black (AN 018)
VPE	pack of 2
DIN	DIN right and left hand
ITEM NO.	AN 180 3D (AN 018)

24.12.2025 © SIMONSWERK GmbH

Despite the utmost care taken in the preparation of this data sheet, we cannot accept any liability for printing errors or mistakes.

ANSELMI - AN 180 3D

ITEM NO. (SAP)	
EAN	8054608708082

Finish	Antique Bronze (AN 035)
VPE	pack of 2
DIN	DIN right and left hand
ITEM NO.	AN 180 3D (AN 035)
ITEM NO. (SAP)	
EAN	8054608708099

Finish	Aluminium Chrome (AN 036)
VPE	pack of 2
DIN	DIN right and left hand
ITEM NO.	AN 180 3D (AN 036)
ITEM NO. (SAP)	
EAN	8054608708105

Finish	Polished Brass (AN 037)
VPE	pack of 2
DIN	DIN right and left hand
ITEM NO.	AN 180 3D (AN 037)
ITEM NO. (SAP)	
EAN	8054608708112

Finish	Polished Chrome (AN 039)
VPE	pack of 2
DIN	DIN right and left hand
ITEM NO.	AN 180 3D (AN 039)
ITEM NO. (SAP)	
EAN	8054608708129

Finish	Satin Nickel (AN 044)
VPE	pack of 2
DIN	DIN right and left hand
ITEM NO.	AN 180 3D (AN 044)
ITEM NO. (SAP)	
EAN	8054608708136

Finish	RAL 9016 Traffic White (AN 049)
VPE	pack of 2
DIN	DIN right and left hand

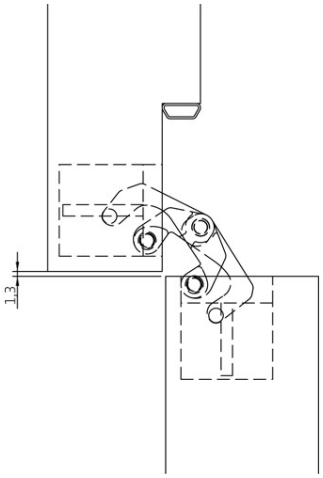

block frame 90°

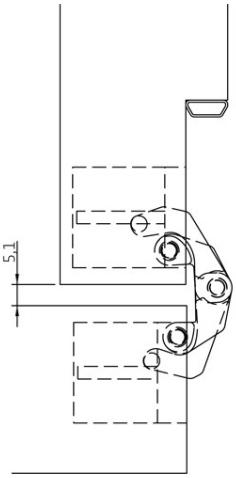

block frame 180°

24.12.2025 © SIMONSWERK GmbH
Despite the utmost care taken in the preparation of this data sheet, we cannot accept any liability for printing errors or mistakes.

ANSELMI - AN 180 3D

ITEM NO.	AN 180 3D (AN 049)
ITEM NO. (SAP)	
EAN	8054608708143

Finish	Anthracite (AN 050)
VPE	pack of 2
DIN	DIN right and left hand
ITEM NO.	AN 180 3D (AN 050)
ITEM NO. (SAP)	
EAN	8054608709027

Finish	Medium Bronze (AN 051)
VPE	pack of 2
DIN	DIN right and left hand
ITEM NO.	AN 180 3D (AN 051)
ITEM NO. (SAP)	
EAN	8054608709034

Finish	Copper (AN 052)
VPE	pack of 2
DIN	DIN right and left hand
ITEM NO.	AN 180 3D (AN 052)
ITEM NO. (SAP)	
EAN	8054608709041

24.12.2025 © SIMONSWERK GmbH
Despite the utmost care taken in the preparation of this data sheet, we cannot accept any liability for printing errors or mistakes.