hinge 80/80A closed

Version
left or right model

Rolled with stainless steel pin and ring
With unique patented clamped wear ring

Available accessories:
- universal argenta® milling template
- extra wear rings 1, 2, 3, 4, 5, 6, 7, and 8 mm (for hinge wing thickness 2,5 mm)
- extra clamped wear rings 2, 2.5 mm (for hinge wing thickness 2,5 mm)
- extra wear rings 1, 2, and 3 mm (for hinge wing thickness 3,5 mm)
- appropriate screws

Material
Stainless steel

Finish
Brushed stainless steel, CU, BR, iron-colour, CHR, ALL, white (RAL 9010), black (MAT 9005), rust colour, AS

Technical drawing

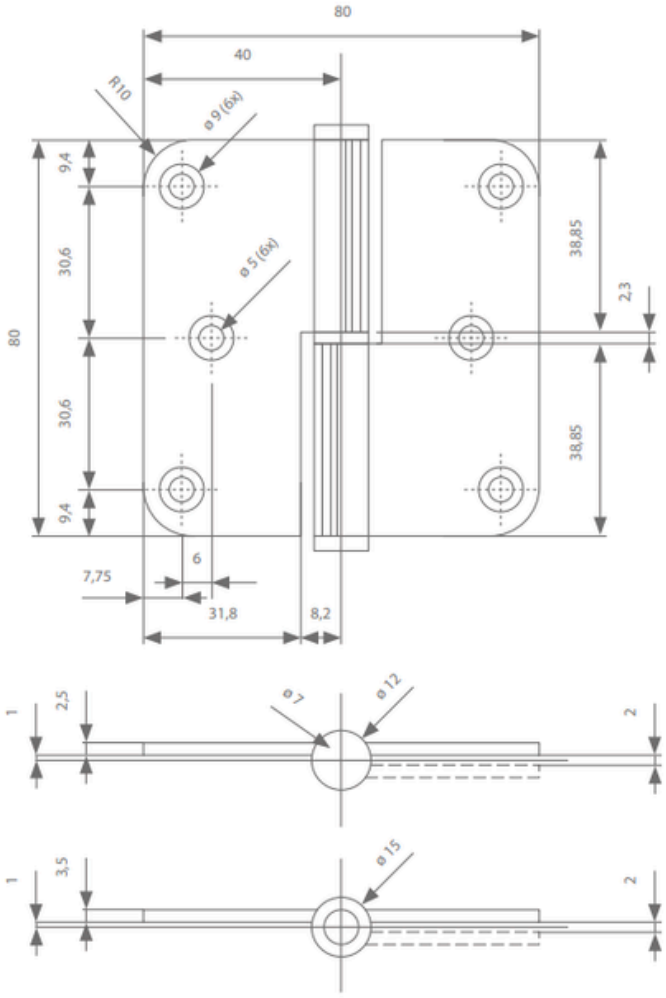

Technical properties

Size	80 mm / 80 mm	80 mm / 80 mm
Knuckle	Ø 12 mm	Ø 15 mm
Leaf width	31,8 mm 'closed'	30,8 mm 'closed'
Leaf thickness	2,5 mm	3,5 mm
Pin	7 mm	8 mm